IEEE/UL Battery
Sizing by
MooreU
610-952-6067
www.mooreu.com

LHR Series-High Rate

LHR12650W(12V650W)

LEOCH BATTERY

Specifications

Rated Voltage		12V
Nominal Rate(W_{15},1.67V/cell) Nominal Capacity(C_{10},1.80V/cell)		650W/cell 170Ah
Dimension	Length Width Container Height Total Height	532±2mm (20.9 inches) 207±2mm (8.14 inches) 214±2mm (8.42 inches) 220±2mm (8.66 inches)
Approx Weight		57.0kg (125.7 lbs)
Terminal		M8
Container Material		ABS: UL 94 HB or V-0 optional
Rated Capacity(25℃)	170.0 Ah 157.6 Ah 149.5 Ah 132.6 Ah 108.2 Ah	C10(17.0A,1.80V/cell) C8(19.7A,1.80V/cell) C5(29.9A,1.75V/cell) C3(44.2A,1.75V/cell) C1(108.2A,1.60V/cell)
Max. Discharge Current		1700A (5s)
Internal Resistance(25℃)		Approx 3.2mΩ
Operating Temp. Range	Discharge Charge Storage	-20 ~ 55℃ (-4 ~ 131℉) -20 ~ 40℃ (-4 ~ 104℉) -15 ~ 50℃ (5 ~ 122℉)
Nominal Operating Temp. Range		25±3℃ (77±5℉)
Max.Charging Current(25℃)		42.5A
Charge voltage(25℃)		Charge voltage / Temp. Coefficient
	Float	2.25 ~2.30V/cell / -3mV/cell/℃
	Equalization	2.30~2.40V/cell / -4mV/cell/℃
Effect of temp. to Capacity	40℃ (104℉)	106%
	25℃ (77℉)	100%
	0℃ (32℉)	86%
Self Discharge		≤3%/month @ 25℃

Layout

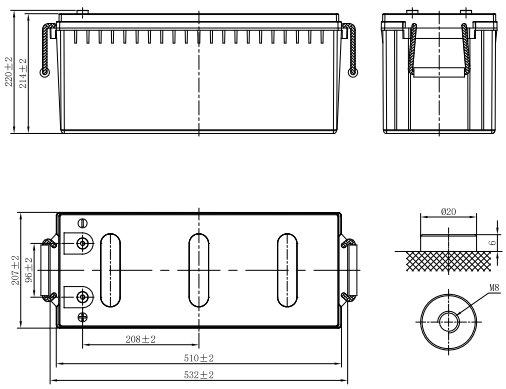

Constant Current Discharge (Amperes) at 25 °C (77°F)

F.V/Time	5min	10min	15min	20min	30min	45min	1h	1.5h	2h	3h	4h	5h	8h	10h
1.85V/cell	388.8	310.4	269.1	211.7	146.7	115.5	93.6	68.7	56.2	41.8	33.1	28.0	19.3	16.5
1.80V/cell	442.2	352.4	305.0	239.3	165.4	122.6	96.7	70.8	59.5	43.2	34.3	29.1	19.7	17.0
1.75V/cell	480.8	382.6	330.5	258.6	178.1	130.0	100.7	73.7	61.8	44.2	35.5	29.9	19.9	17.1
1.70V/cell	513.5	407.4	350.7	273.9	188.6	137.3	105.1	76.8	63.2	45.1	36.3	30.6	20.2	17.2
1.67V/cell	531.4	420.3	360.9	281.4	193.1	140.4	106.2	78.8	64.8	46.1	36.8	31.0	20.5	17.5
1.60V/cell	550.2	434.7	372.1	288.6	197.8	144.0	108.2	81.4	66.0	47.3	37.6	31.6	20.6	17.5

Constant Power Discharge (Watts/cell) at 25 °C (77°F)

F.V/Time	5min	10min	15min	20min	30min	45min	1h	1.5h	2h	3h	4h	5h	8h	10h
1.85V/cell	726.2	584.0	509.6	402.6	280.3	222.0	181.0	133.2	109.3	81.8	64.9	55.1	38.4	32.9
1.80V/cell	812.3	653.3	570.1	450.3	313.5	234.2	186.0	136.5	115.2	84.1	67.1	57.1	39.1	33.8
1.75V/cell	867.9	698.0	609.1	481.1	335.0	246.8	192.8	141.5	119.1	85.7	69.1	58.5	39.3	33.9
1.70V/cell	911.4	733.0	639.6	505.3	351.8	258.9	200.2	146.7	121.4	87.2	70.4	59.7	39.9	34.1
1.67V/cell	926.3	744.9	650.0	513.5	357.5	263.2	201.2	149.8	123.8	88.7	71.1	60.2	40.3	34.5
1.60V/cell	939.2	755.3	659.1	520.7	362.5	267.6	203.5	153.7	125.4	90.5	72.4	61.2	40.4	34.7

IEEE/UL Battery
Sizing by
MooreU
610-952-6067
www.mooreu.com

LHR Series-High Rate

LHR12650W(12V650W)

LEOCH BATTERY

Applications

- UPS
- Hospitals & Testing Laboratories
- Emergency Power Supply
- Banks & Financial Markets
- Industrial Process Control Facilities
- Data & Network Operation Centers

General Features

- High quality AGM separator: extend cycle life and prevent micro short circuit
- PbCaSn alloy for plate grids: less gassing, less self-discharging
- Unique vent valve design: reduce water losing and prevent air/spark going inside

Standards

- Compliance with IEC 60896 and YD/T 3427 standards
- Manufactured in Leoch®IATF16949, ISO 45001,ISO 9001 and ISO 14001 certified production facilities

Discharge Characteristics

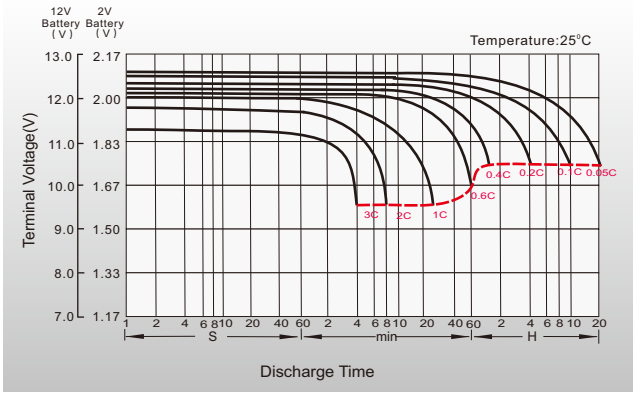

Float Charging Characteristics

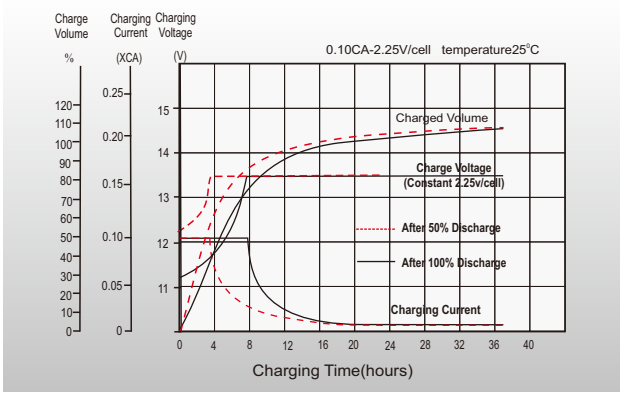

Temperature Effects in Relation to Battery Capacity

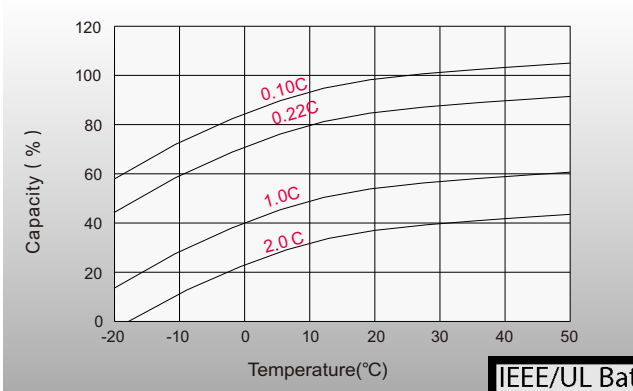

Temperature Effects on Long Term Float Life

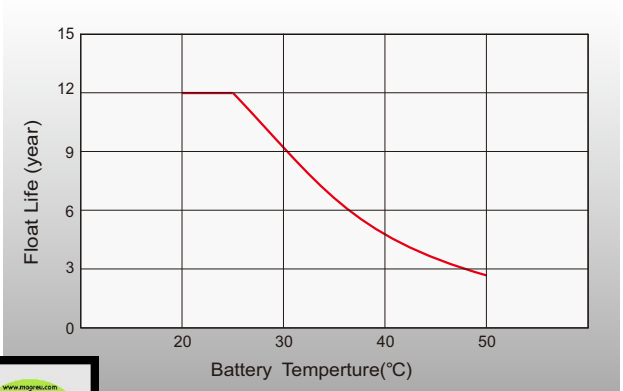

IEEE/UL Battery
Sizing by
MooreU
610-952-6067
www.mooreu.com

Sales Offices Worldwide

China Sales Office
5th Floor, Xinbaohui Bldg., Nanhai Blvd., Nanshan, Shenzhen, China. 518052
Tel: +86-755-86036060 (100 lines)
Fax: +86-755-26067269
E-mail:export@leoch.com

HongKong Sales Office
Workshop C, 33/F, TML Tower, No. 3 Hoi Shing Road, Tsuen Wan, New Territories, Hong Kong
Tel: +852 35786666
Fax: +44 1452 690125
E-mail: sales.hk@leoch.com

Singapore Sales Office
No. 1 Tech Park Crescent, Singapore 638131
Tel: +65 68636078
Fax: +65 6863 6079
Email: sales.sg@Leoch.com

Australia Sales Office
2 /29 Tarlington Place, Smithfield. NSW 2164 Australia
Tel: 02 9756 0950
E-mail: sales.au@leoch.com

North America Sales Office
19751 Descartes Foothill Ranch, CA 92610, USA
Tel: 949-588-5853
Fax: 949-588-5966
E-mail: sales@leoch.us
Http:// www.leoch.us

UK Sales Office
9B Wheatstone Court. Waterwells, Business Park, Gloucester, GL2-2AQ, UK United Kingdom
Tel: +44(0) 1452 729428 / 1452 729696
Fax:+44 1452 690125
E-mail: Sales.Europe@leoch.com
Http:// www.leoch.eu

EMEA Sales Office
1 Deligiorgi St., 121 31 Athens, Greece
Tel: +30 210 5760318 (2 lines)
E-mail: support_EMEA@leoch.com
Http:// www.leoch.eu

India Sales Office
Shed no.A-53(b), 2nd Stage of Peenya Industrial Area, Bangalore North Taluk, Bangalore-560058, India
Tel: +91-80-23440018/23440019
Fax: +91-80-23440017
E-mail: indiasales@leoch.com

Http://www.leoch.com

© 1999-2022 LEOCH. All rights reserved.
Trademarks and logos are the property of LEOCH and its affiliates unless otherwise noted.
Subject to revisions without prior notice.

Publication No.: LB-LHR12650W-PD-EN-V1.0-202201